Make: VOLKSWAGEN

Model: Transporter (T4 96->)

Part Number: ADB1852

Vehicle Manufacturing/Engine:

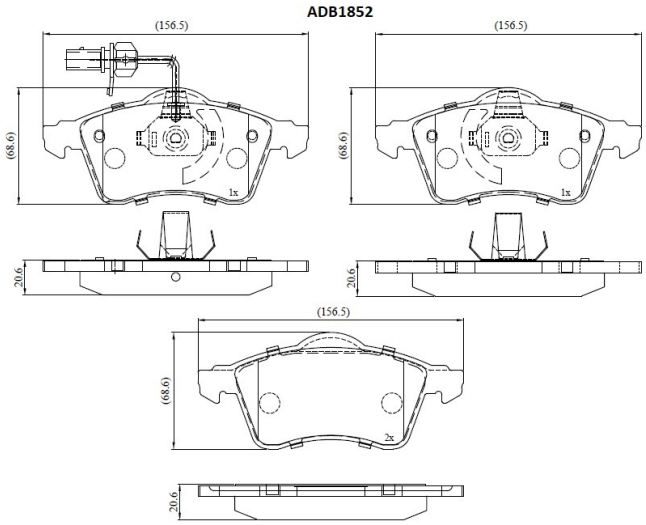

Specifications

Fitting Position	:	Front
Model Date	:	05/96->
Or. Caliper	:	Ate

WVA	:	21885
FMSI	:	
Length	:	156.5
Width	:	68.6
Thickness	:	20