Make: VOLVO

Model: 940, 960 Series

Part Number: ADB4155

Vehicle Manufacturing/Engine:

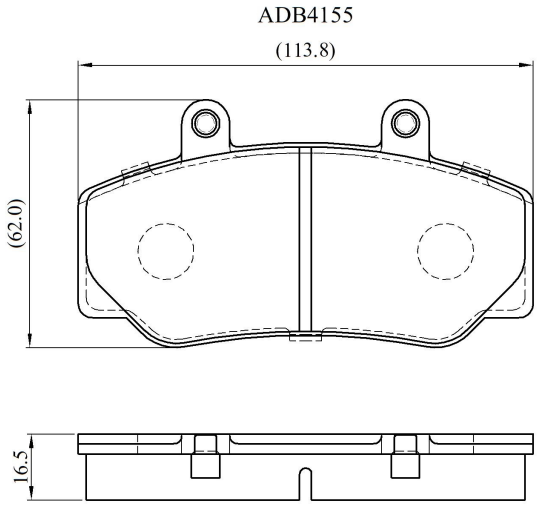

Specifications

Fitting Position	:	Front
Model Date	:	01/90-01/94
Or. Caliper	:	Bendix

WVA	:	21233
FMSI	:	
Length	:	113.8
Width	:	62
Thickness	:	16.5