Make: VOLVO

Model: C70

Part Number: ADB0731

Vehicle Manufacturing/Engine:

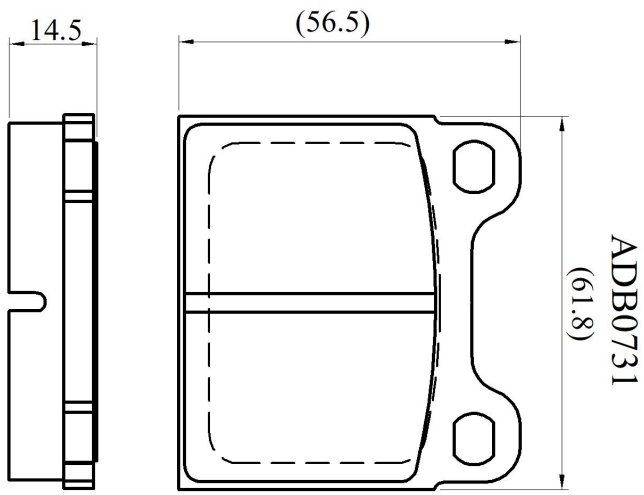

Specifications

Fitting Position	:	Rear
Model Date	:	03/98->

Or. Caliper	:	Ate
WVA	:	20034
FMSI	:	
Length	:	61.8
Width	:	56.5
Thickness	:	14.5