Make: VOLVO

Model: S40 (->98)

Part Number: ADB3813

Vehicle Manufacturing/Engine:

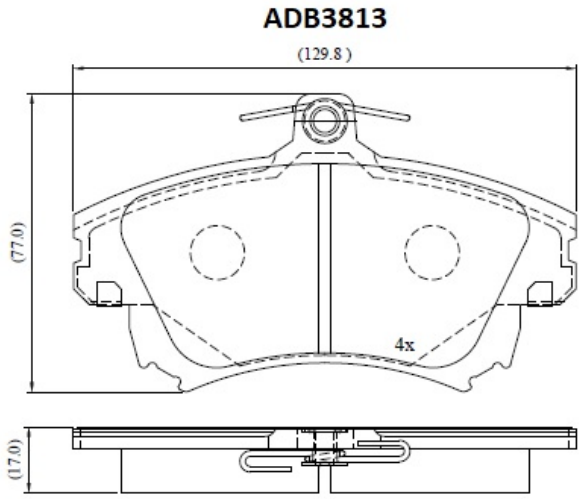

Specifications

Fitting Position	:	Front
Model Date	:	01/98->
Or. Caliper	:	Lucas

WVA	:	21983
FMSI	:	
Length	:	129.8
Width	:	77
Thickness	:	17