Make: VOLVO

Model: S40 (98->)

Part Number: ADB3945

Vehicle Manufacturing/Engine:

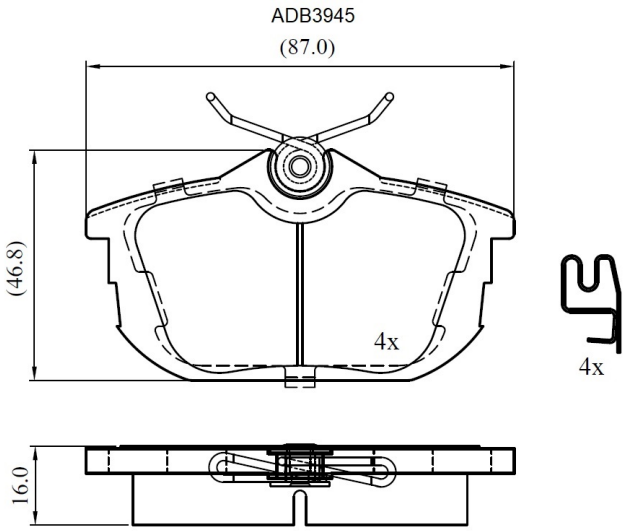

Specifications

Fitting Position	:	Rear
Model Date	:	01/98-->
Or. Caliper	:	Lucas

WVA	:	21861
FMSI	:	
Length	:	87
Width	:	46.8
Thickness	:	16