Make: VOLVO

Model: S70

Part Number: ADB0886

Vehicle Manufacturing/Engine:

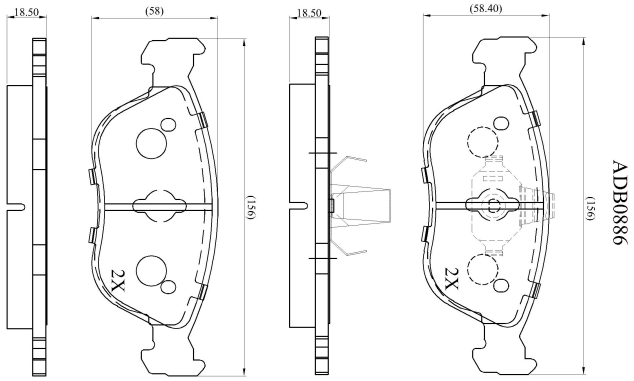

Specifications

Fitting Position	:	Front
Model Date	:	01/96-11/00
Or. Caliper	:	Ate
WVA	:	21492
FMSI	:	
Length	:	155
Width	:	58.4
Thickness	:	18.5