Make: VOLVO

Model: V40 (->98)

Part Number: ADB3462

Vehicle Manufacturing/Engine:

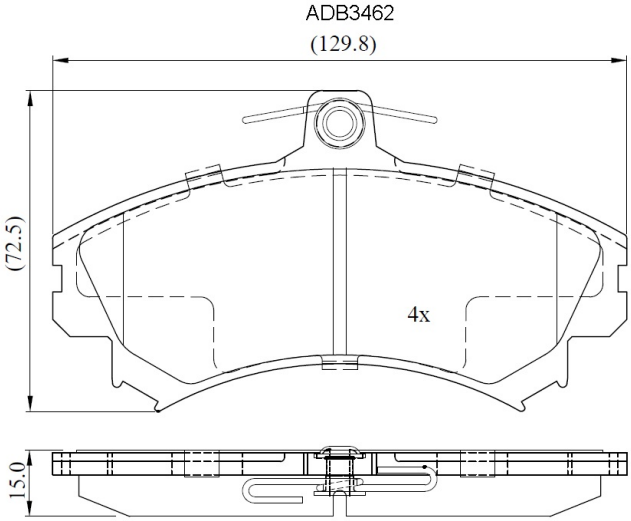

Specifications

Fitting Position	:	Front
Model Date	:	01/96-01/98
Or. Caliper	:	Lucas

WVA	:	21920
FMSI	:	
Length	:	129.8
Width	:	72.5
Thickness	:	15