**Make: VOLVO**

**Model: V40 (->98)**

**Part Number: ADB3945**

**Vehicle Manufacturing/Engine:**

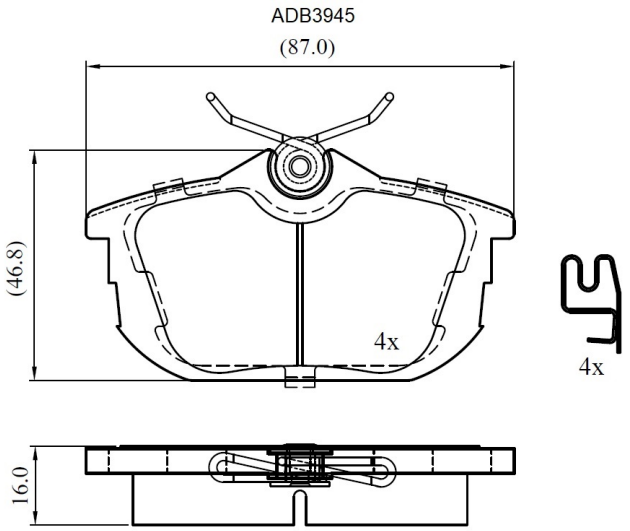


**Specifications**

| | | |
|---|---|---|
| **Fitting Position** | : | Rear |
| **Model Date** | : | 01/96-01/98 |
| **Or. Caliper** | : | Lucas |

| | | |
|---|---|---|
| **WVA** | : | 21861 |
| **FMSI** | : | |
| **Length** | : | 87 |
| **Width** | : | 46.8 |
| **Thickness** | : | 16 |